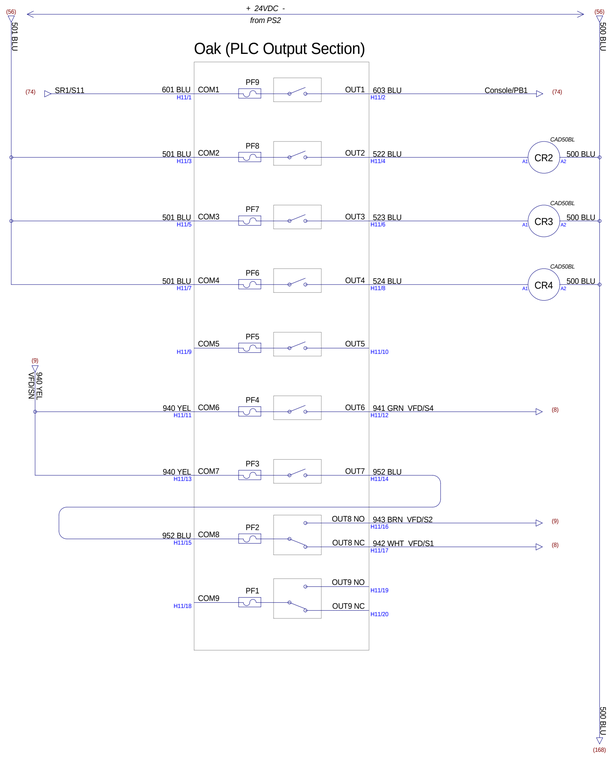

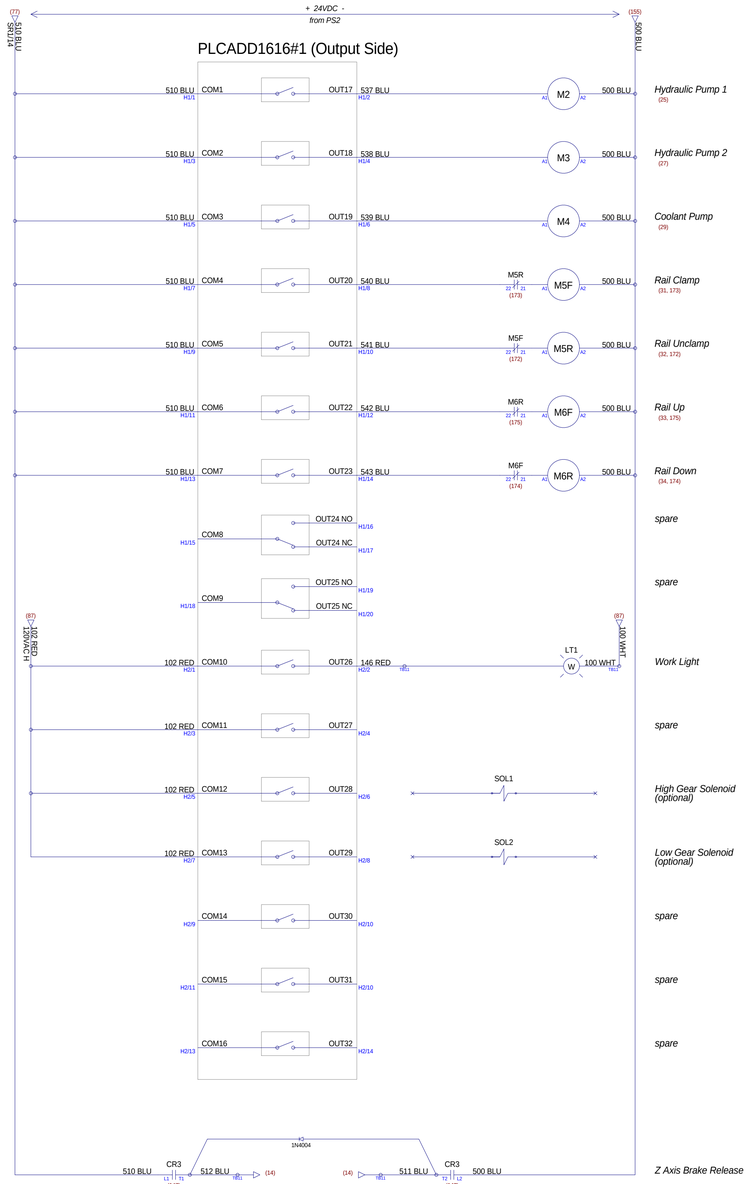

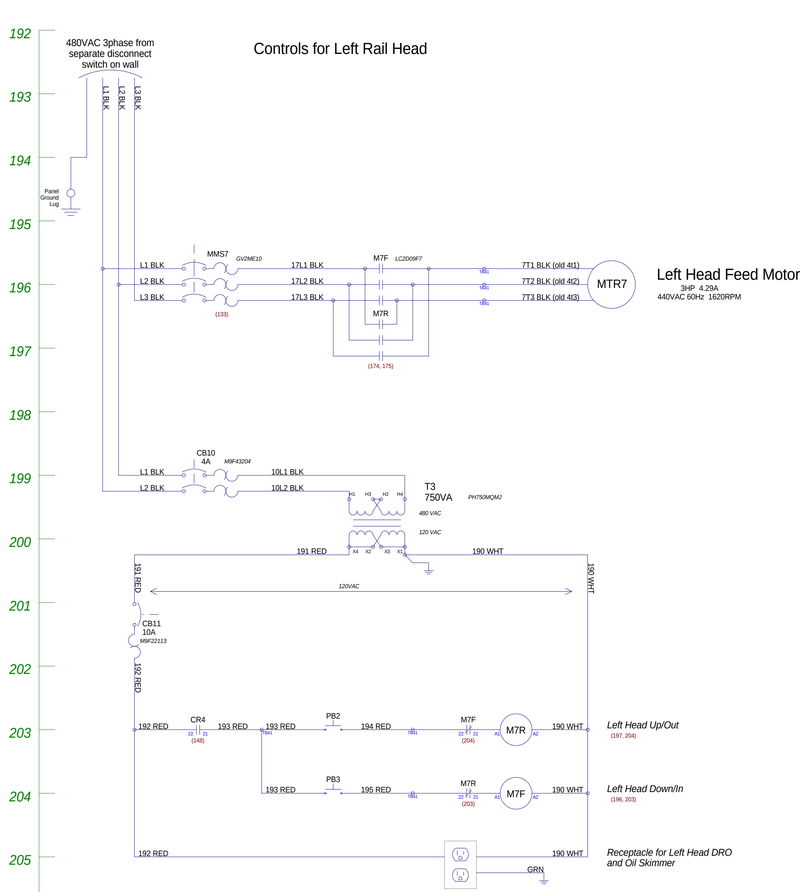

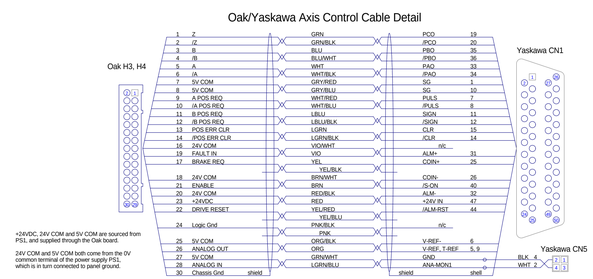

MACHINE: Giddings & Lewis VTL w/ Centroid T400 Control			
DRAWN BY: Marc Leonard	SIZE: D	REV: 1	DATE: 21-Apr-2021
SCALE: none	SHEET: 3 OF 3		FILE: K103982_3.VCD